insight
metering systems

iSonic-8X-L3 Liquid/Gas

ULTRASONIC FLOW METER TECHNOLOGY

insight
metering systems

The new iSonic-8X-L3 is the only ultrasonic flow meter (USM) that ensonifies and measures 100% of the flow field.

Finally, an accurate, reliable and robust USM offering:

- Elimination of errors due to Reynolds Number changes, hydraulic issues, fouling or short inlet runs
- Inherent accuracy without relying on flow conditioners that can clog and require maintenance
- Freedom to install the meter in tight piping installations – eliminating expensive upstream pipe
- Greater flow ranges and low pressure loss – allows for smaller meters for applications
- Freedom to expect that a calibration done on one fluid/gas (on one Reynolds Number range) can be used anywhere
- Reliable technology that promises years of service without ever requiring maintenance.

The iSonic-8X-L3 measures 100% of the velocity field, like a Coriolis meter, which measures the complete flow field using vibrating tube phase changes caused by the full mass flow.

Perfect for LACT applications and short meter runs

Perfect for gas applications from 0 psig (0 barg) to 3705 psig (250 barg)

iSonic-8X-L3 measures 100% of the flow field eliminating concerns about hydraulic issues

Past multi-path USMs have always had an inherent limitation; their flow measurement is based on very limited “views” of the flow field. Most USMs base their flow on measurements along 1 to 4 “elevations” across the flow cross-section (even 8 and 12 “path” meters only have 4 elevations).

Using just these few elevations, past USMs are forced to rely on assumptions and approximations to determine “average” flow (velocity times area), never realizing that the USM was “blind” to the things that cause errors.

The iSonic-8X-L3 patented design completely “sees” the flow field – a 100% measurement of the flow field. The iSonic-8X-L3 uses acoustic arrays of sensors. Using rows of sensors – the sensors completely measure the full cross-section. In fact, by using arrays of sensors – the iSonic-8X-L3 will overlap its rows of sensors – so that all flow field areas are redudantly measured.

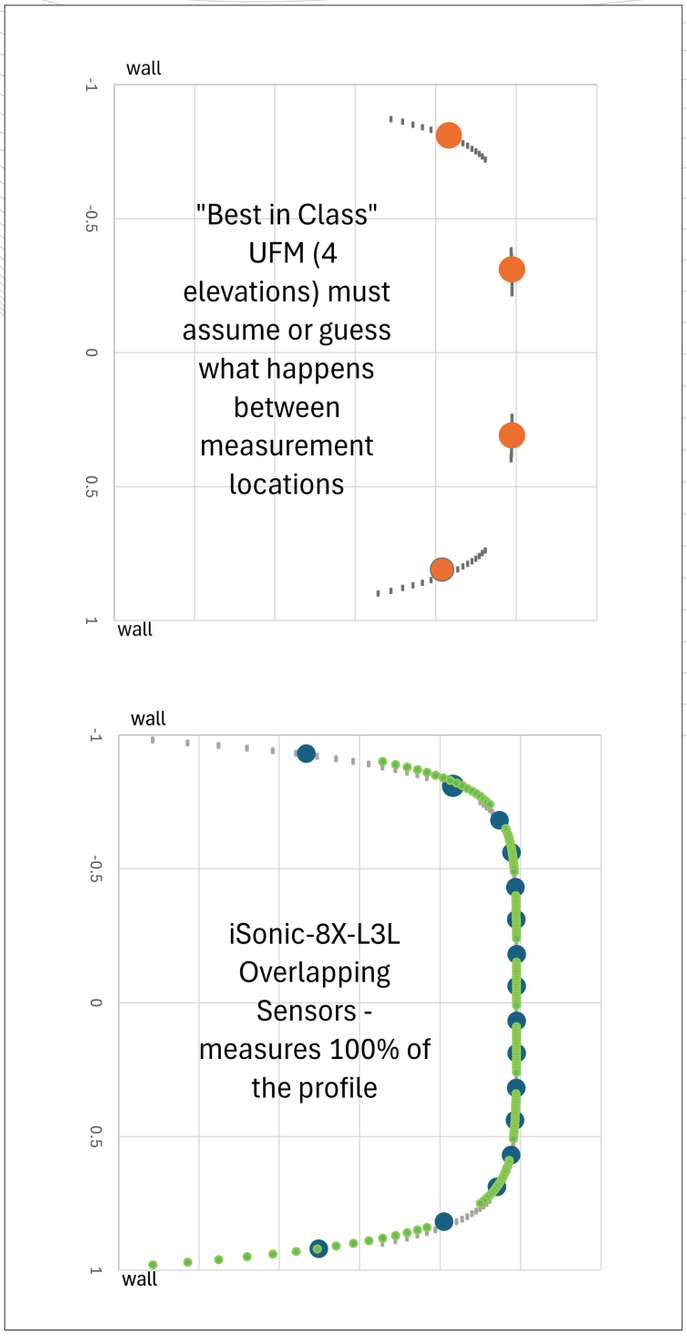

[1] Things can get confusing as many USMs manufacturers choose to talk about the number of acoustic paths or the number of bounces in their meter. But an acoustic path or bounce does NOT equate to useful measurement “elevation” to determine flow. Even the best in class “8-path” USMs only measure at 4 “elevations” across the whole cross-section.

[2] Many manufacturers try to address/hide their Reynolds Number sensitivity with algorithms and software fixes -without these “tricks” the errors are often several percent.

A 100% flow field measurement – eliminates errors caused when Reynolds Numbers change

Past USM meters had large errors when Reynolds Numbers were between 1,000 and 100,000. Any differences between the Reynolds Numbers during a meter's calibration and when installed in the field made transferring factory calibration problematic. Calibration laboratories rarely create Reynolds Numbers that match those in the field. The difference in Reynolds Numbers introduces errors into the calibration constants of past USMs. Since the iSonic-8X-L3 measures 100% of the flow field, it has no sensitivity to Reynolds Numbers.

The iSonic-8X-L3 design and validation tests have shown that Reynolds Number changes are not a problem (contact Insight Metering Systems for more information including tests at NEL).

A 100% flow field measurement – addresses difficult hydraulics, short run inlets and unexpected fouling

Past USMs produced measurement errors when installed with short inlet runs (near things like elbows, tees, valves, etc.) or after correctly installing a necessary flow conditioner then having that flow conditioner clog or foul.

Again the iSonic-8X-L3 has no issues with difficult hydraulics (contact Insight Metering Systems for more information including data from NIST traceable laboratories).

Calibrations at High Reynolds Numbers

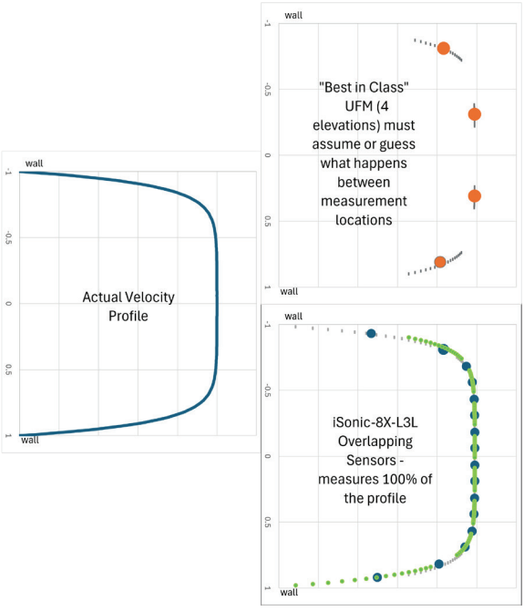

Field Installations at Lower Reynolds Numbers

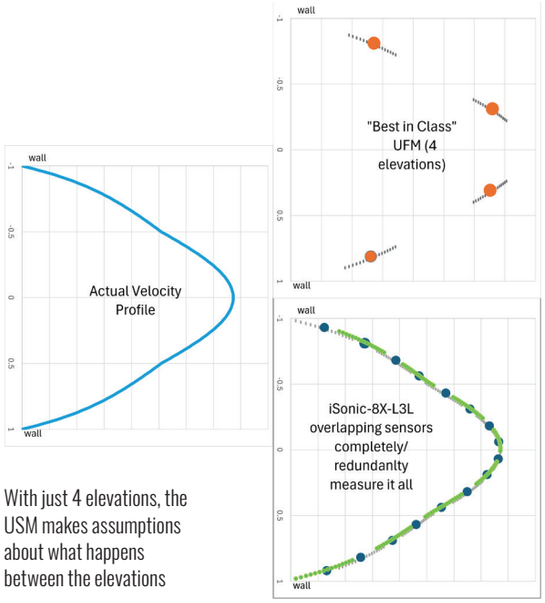

With just 4 elevations, the USM makes assumptions about what happens between the elevations

Clogged Flow Conditioners

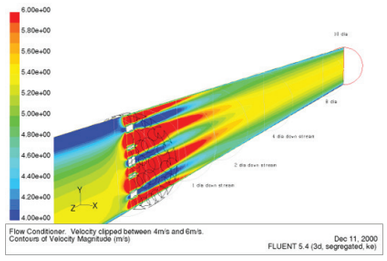

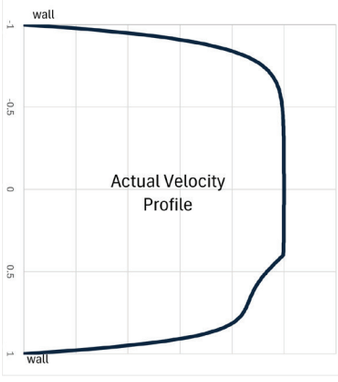

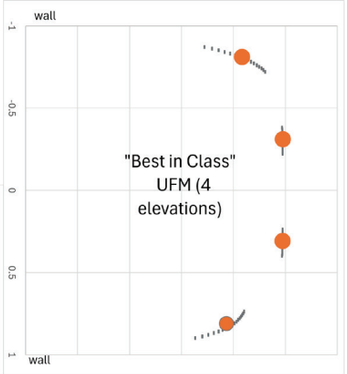

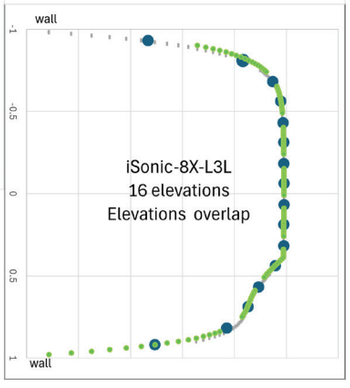

Short Inlet Run (Elbow Example)

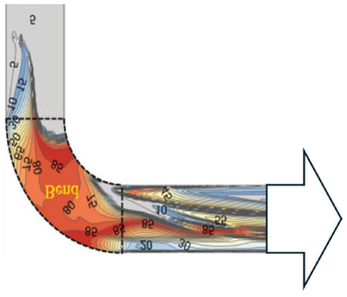

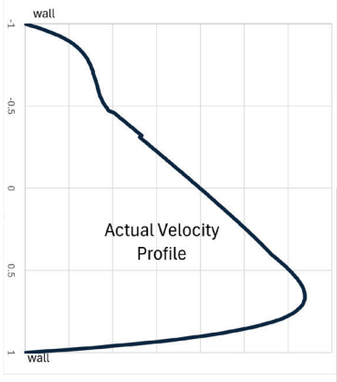

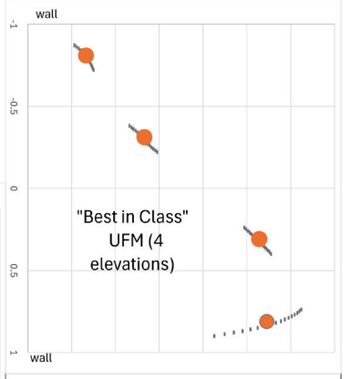

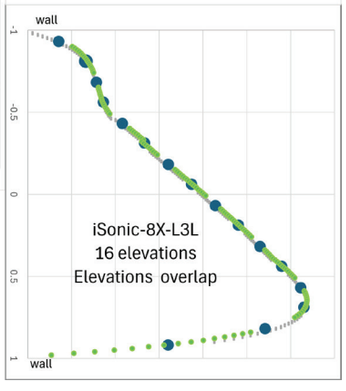

iSonic-8X-L3 – Quality, reliability, information and price

By completely measuring the velocity profile – the iSonic-8X-L3 has fully addressed the accuracy issues that have plagued past USMs.

The iSonic-8X-L3 has more features, including:

- **Optional welded/metal design – no more O-ring concerns**

  The iSonic-8X-L3 patent pending pressure containment construction uses only metal and welding – O-rings are NOT required. No need to worry about an O-ring's age/chemistry/maintenance - reducing the user costs. Further, all the potential workforce, HSE issues and maintenance challenges associated with de-pressurizing/draining lines to replace a failed O-rings are eliminated.

- **Totally maintainable**

  The iSonic-8X-L3 acoustic arrays are completely maintainable – under all operating conditions – regardless of flow, pressure or hazardous area considerations.

- **Unparalleled internal redundancy and self-checking**

  The iSonic-8X-L3 can provide two overlapping acoustic arrays of flow measurement; independently providing near 100% flow field measurement. Taking the flow indication outputs available for the two independent arrays provides a self-checking output that is more robust than any past USM.

  When the application requires two electronics for full redundancy, the iSonic-8X-L3 can easily be outfitted with redundant electronics. In this instance, the meter body can be installed with twice the number of acoustic arrays installed at different angles to the flow, providing an independence between the arrangements for self-checking.

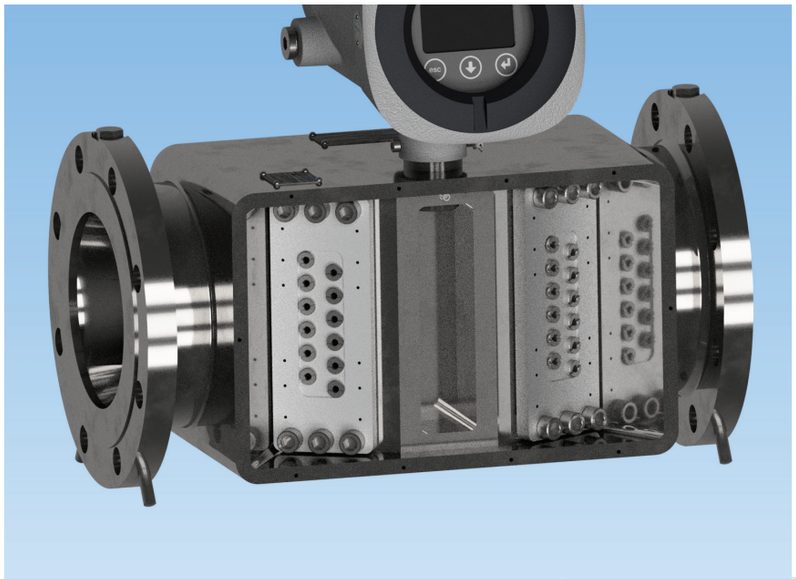

View of iSonic-8X-L3G gas meter with cover and terminal PCB removed

Dual electronics for the iSonic-8X-L3L liquid meter

One Meter for Many Applications: Liquid

Market	Upstream	Midstream	Downstream
Application	LACT	Metering Stations	Distribution
	Fracking Fluids	Offloading/FPSO	Offloading
Products	Crude	Crude	Refined
	Water	Redined	
Class	150# to 1500#	150# to 600#	150# to 600#
NPS			
3	x		x
4	x		x
6	x	x	
8		x	
10		x	
12		x	
16		x	

Upstream

Midstream

Downstream

One Meter for Many Applications: Gas

Market	Upstream	Midstream	Downstream
Application	Well Head/ Gas Lifting		Distribution
	Clean/Sour	Clean/Sour	Clean
Products	Clean/Sour	Clean/Sour	Clean
	Wet & Dirty		
Class	600# to 1500#	300# to 900#	150# to 300#
NPS			
3	x		x
4	x		x
6	x	x	x
8		x	x
10		x	
12		x	
16			

[3] Note: Gas meters and liquid meters are ordered with different acoustic arrays.

Upstream

Midstream

Downstream

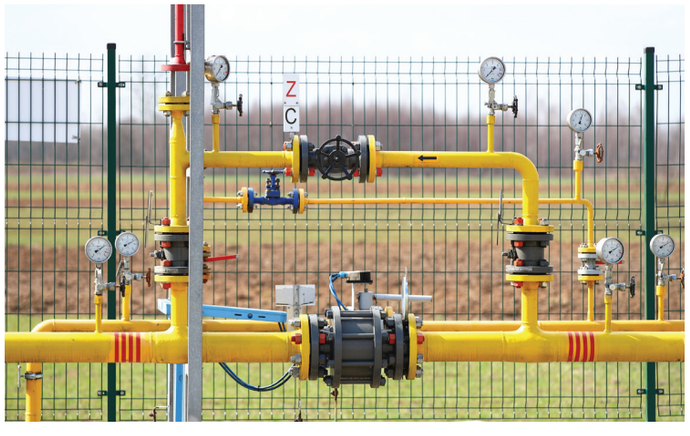

Principle of Operation

- Ultrasonic transit time flow meter

Construction

Acoustic Array assemblies: Liquid/Gas

- All metal/welded construction
- All transducer components are fully maintainable – no need to depressurize for maintenance.

Meters construction

- Stainless steel (choice of 304/316L/316)
- A105/A350 LF2 carbon steel
- Aluminum (Note: Aluminum requires O-ring seals)
- Transmitter enclosure material: Aluminum

Conformities/Electronics Certification

- AGA 9
- UL/CUL Class 1 Div I Gr BCD T4...T6
- ATEX/IECEx IIB+H2 db ia mb T4...T6
- OIML R137 Certified Electronics
- OIML R117 in process

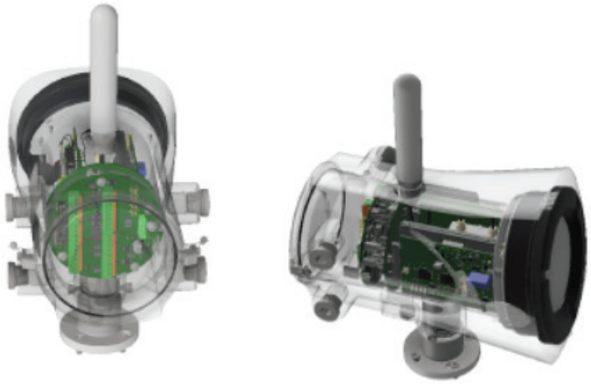

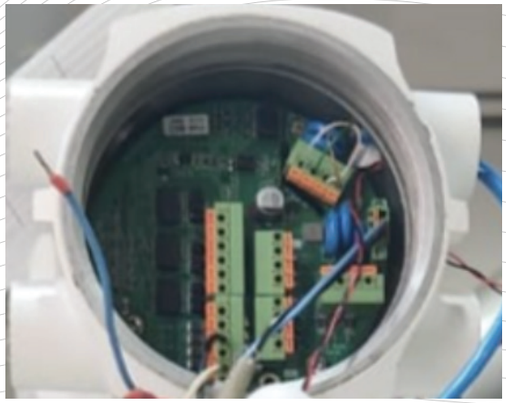

Installation Requirements

- Minimum upstream piping length - 0 mm [0 inches] – as the complete profile is measured – any profile is a good profile.

Additional notes:

When using the iSonic-8X-L3L (liquids) with a small volume prover – extremely contorted upstream hydraulics may increase proving data scatter.

Using the iSonic-8X-L3G (gas) with extremely contorted upstream hydraulics may affect top end velocities (velocities over 25 m/s or 75 ft/s) due to acoustic noise.

- Minimum downstream – as needed for PT and TT installation - build in pressure port for iSonic-8X-L3G. Optional TT well within the meter.

- Transmitter on top recommended

Technical Data - Quick Guide

Measurement Methodology	**Up to 15 elevations (22 paths) of flow measurement (100% coverage)**
Pipe Sizes	3" to 8" (Standard) – 10" to 16" available (longer lead times)
Measurement Principle	Transit Time Class 0.5 Accuracy
Piping Requirements	0 D downstream of elbows/tees/reducers/expanders/pipe size/pipe schedule changes: Applications with unusual conditions (including valves) are possible with Insight Metering authorization
	Flow conditioners allowed – but not needed
Gas/Liquid Temperature Range	–40 °C to +110 °C
Pressure Range	0 psig to 3705 psig/ 0 barg to 256 barg (Standard 150#, 300#, 600#, 900#, 1500#)
Ingress protection	IP66
Environment	
Hazardous Approvals	ATEX/IECEx Ex db ia mb IIB+H2 T4…T6 NEC/CEC (US/CA) Explosion-proof / Intrinsically Safe: Class I, Div. 1 Groups B, C, D, T4…T6
Ambient temperature	–40 °C ~ +70 °C
Storage temperature	–40 °C ~ +70 °C
Ambient humidity	≤95%，non-condensing
Inputs/Outputs	
Analog Outputs (2x)	0, 4 to 20mA, electrically isolated
Analog Inputs (2x)	0, 4 to 20mA, electrically isolated
Digital Outputs (4x)	2 x status, 2 x pulse f_{max} = 10kHz Open collector
Digital Outputs (4x)	2 x status, 2 x pulse f_{max} = 3kHz Open collector
Communication Ports	3 x RS485 (Modbus) 1 x Ethernet (Modbus or MQTT user protocol) 1 x Wi-Fi (MQTT user protocol)
	4G to Cloud communication (optional only)
Power	
Voltage/Power	24 VDC 5W
Data Storage	
Event Log (10,000 events) Parameter modification Log (1,000 modifications) Alarm Log (1,000 alarms)	

Dimensions Common Sizes*

		Imperial (inches)				Weight lbs	Metric (mm)				Weight kg
NPS	Flange	C	A	B	D		C	A	B	D	
3	150	7.5	17.0	17.0	11.7	887	191	432	431	296	402
3	300	8.3	17.0	17.0	12.0	150	210	432	431	306	68
3	600	8.3	17.0	17.0	12.0	179	210	432	431	306	81
3	900	9.5	17.9	17.0	12.7	232	241	454	431	322	105
4	150	9.0	18.8	18.0	12.8	1063	229	476	458	324	482
4	300	10.0	18.8	18.0	13.3	242	254	476	458	337	110
4	600	10.8	18.8	18.0	13.6	278	273	476	458	347	126
4	900	11.5	20.5	18.0	14.0	330	292	520	458	356	150
6	150	11.0	19.5	19.8	14.5	1470	279	495	502	369	667
6	300	12.5	19.8	19.8	15.3	388	318	504	502	388	176
6	600	14.0	22.4	19.8	16.0	533	356	568	502	407	242
6	900	15.0	23.4	19.8	16.5	639	381	594	502	420	290
8	150	13.5	37.1	21.7	16.5	2158	343	942	551	419	979
8	300	15.0	23.9	21.7	17.3	603	381	608	551	438	274
8	600	16.5	24.2	21.7	18.0	760	419	615	551	457	345
8	900	18.5	27.8	21.7	19.0	1040	470	705	551	483	472
10	150	16.0	40.5	23.7	18.5	2887	406	1028	601	470	1309
10	300	17.5	29.0	23.7	19.3	939	445	736	601	489	426
10	600	20.0	29.0	23.7	20.5	1234	508	736	601	521	560
10	900	21.5	30.4	23.7	21.3	1548	546	773	601	540	702
12	150	19.0	43.3	25.8	20.7	3739	483	1099	656	527	1696
12	300	20.5	33.7	25.8	21.5	1363	521	857	656	546	618
12	600	22.0	33.7	25.8	22.2	1728	559	857	656	565	784
12	900	24.0	33.7	25.8	23.2	2081	610	857	656	590	944
16	150	23.5	48.1	29.2	24.2	5417	597	1223	741	614	2457
16	300	25.5	41.3	29.2	25.2	2557	648	1050	741	639	1160
16	600	27.0	41.3	29.2	25.9	3000	686	1050	741	658	1361
16	900	27.8	41.3	29.2	26.3	3321	705	1050	741	668	1506

*Contact us for NPS 10 to 16

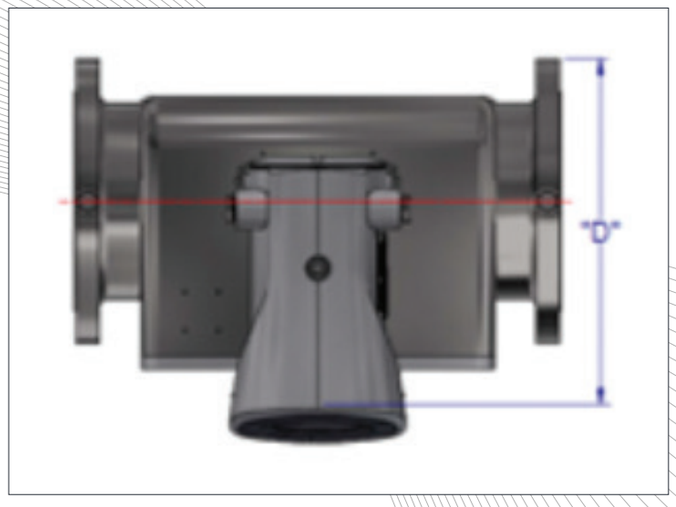

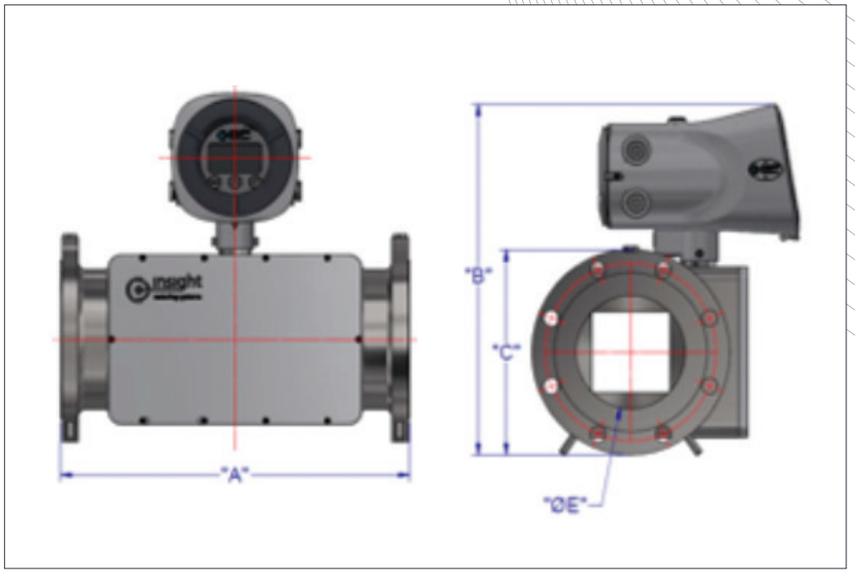

Flow Ranges

Flow meter sizing (simple calculation) – common sizes below:

Area = ID2/4* π Q_{min}, Q_T, Q_{max} Flow (gas) is actual flow.

- Q_{min}
  - Gas: Q_{min} = V_{min} * Area = 0.3 m/s (0.9 ft/s) * Area
  - Liquids: Q_{min} = V_{min} * Area = 0.3 m/s (0.9 ft/s)* Area
- Q_T
  - Gas: Q_{min} = VT * Area = 1.0 m/s (3.3 ft/s)* Area
  - Liquids: Q_{min} = VT * Area = 0.67 m/s (2.0 ft/s)* Area
- Q_{max}
  - Gas: Q_{min} = VT * Area = 36 m/s (120 ft/s)* Area
  - Liquids: Q_{min} = VT * Area = 12 m/s (9 ft/s)* Area

Uncertainty and Accuracy Summary	
Linearity	±0.10% over nominal flow range
Reynolds Number	All – Fully-mixed fluids
Repeatability	±0.02%
Proving	Per API MPMS Chapter 5.8 Table B-1 achieves meter factor uncertainty of ±0.027%
Nominal Flow Range: Q_{max} to Q_t	36:1 Gas meters 20:1 Liquid meters
Full Flow Range: Q_{max} to Q_{min}	120:1 Gas meters 60:1 Liquid meters
Liquid Meters – Water in oil	Meter can operate with water in oil content as high as 50% – if the fluids are well mixed (typically velocities greater than 2.5 to 3 m/s)
Gas Meters – Liquid fraction	Meter operates with liquid volume fraction of 5%

Gas iSonic-8x-L3G Gas Flow Ranges

	m³/hr			ft³/hr		
NPS	Qmin	Qt	Qmax	Qmin	Qt	Qmax
3	4.29	14.3	515	152	505	18191
4	7.4	24.6	887	261	870	31325
6	16.8	55.9	2013	592	1975	71089
8	29.0	96.8	3486	1026	3419	123098
10	45.8	153	5494	1617	5390	194032
12	65	217	7799	2295	7651	275424
14	79	262	9426	2774	9246	332867
16	103	342	12313	3624	12079	434831

Liquid iSonic-8x-L3L Flow Ranges

	m³/hr			Barrels/hr		
NPS	Qmin	Qt	Qmax	Qmin	Qt	Qmax
3	3.43	10.3	206	21.6	64.8	1296
4	5.9	17.7	355	37.2	112	2232
6	13.4	40.3	805	84.4	253	5065
8	23.2	69.7	1394	146	438	8770
10	36.6	110	2198	230	691	13823
12	52	156	3120	327	981	19622
14	63	189	3770	395	1186	23714
16	82	246	4925	516	1549	30979

User Interface - SmartLink

Insight SmartLink is an intelligent, intuitive and simplified diagnostic software designed to facilitate the meter's configuration, monitoring, and if necessary, troubleshooting. SmartLink guides operators through any evaluation needed. SmartLink was created focusing on "simplicity" avoiding complex and complicated data screens. The user no longer needs to struggle with confusing charts, too many screens and too much data.

SmartLink was designed with an intelligent dashboard, simplified and easily personalized by selecting graphical or numerical data and dragging in to an intuitive dashboard.

Simplified and adaptable, SmartLink meets the user's need for reliable, accurate and continuous flow analysis. SmartLink can always export data into Excel for customized analysis – when needed.

SmartLink provides performance-based diagnostics to ensure continuous performance, reliability and accuracy 24/7. Acoustic/hydraulic displays show:

- Sensor waveforms
- Signal to noise ratios
- Speed of sound
- Gain percent-performance and more

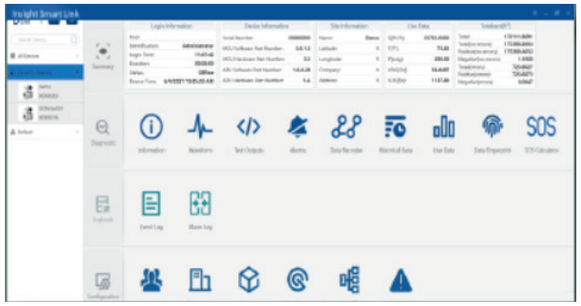

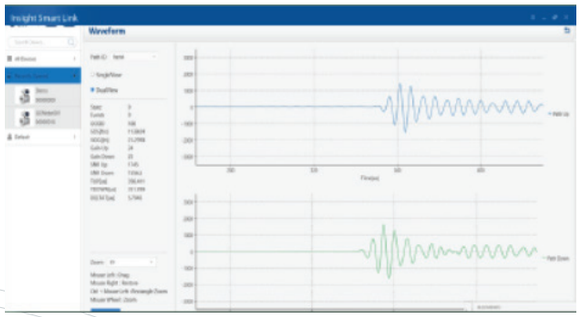

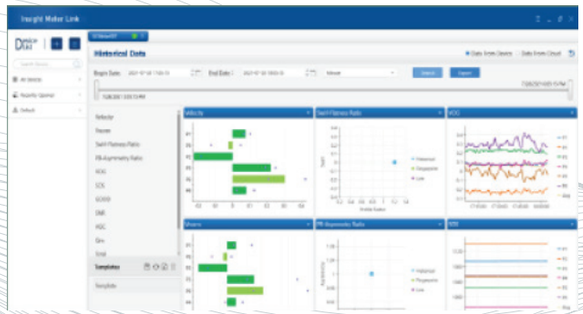

Our mission is to provide the most innovative, accurate, reliable and practical flow measurement systems, at the most competitive value and accessibility. Our objective is to provide our customers with the service they deserve, share our knowledge, educate and empower them to make intelligent, beneficial and safe decisions in their quest for development or improvement of their flow metering systems.

Learn more at InsightMetering.com

LEARN MORE

insight
metering systems

info@insightmetering.com